

BRAE / Metal

WALL

Brae is an indirect wall light that washes the wall with light in a full circle. Born from the study and exploration into the hands-on technique of sand cast metal and machined wood. The wall light features a clean silhouette juxtaposed by the raw materials and serendipitous textures that occur in the casting or natural timber.

MADE IN MELBOURNE, AUSTRALIA

MATERIAL FINISHES

SHADE	Raw Brass	Bronzed Brass	Blackened Brass
	Raw Aluminium	Aged Aluminium	
BODY	Body to Match Shade		

LIGHT SOURCE

COLOUR TEMPERATURE (CCT)	2700K - Warm White 3000K - Natural White 3500K - Mid White
CONTROL (REMOTE)	Non Dimmable Phase Dimmable (Standard) Dali Dimmable
LAMP	LED Module - Constant Current
POWER	3.60 Watts
OUTPUT	500 Lumens
LED LIFE	50,000 Hours
LED SET UP	Indirect
COLOUR RENDERING INDEX (CRI)	90+

PHYSICAL

DIMENSIONS	Brass - 155mm Dia. x 85mm D Aluminium - 155mm Dia. x 85mm D
WEIGHT	Brass - 1.95kg Aluminium - 0.75kg
MOUNTING	Bracket

COMMERCIAL

LEAD TIME	6 Weeks
WARRANTY	3 Year Manufacturers Warranty
INSTALLATION	Licensed Electrician

CERTIFICATION

AU/NZS	AU/NZS 60598.1, 60598.2.1
INGRESS PROTECTION (IPXX)	Up to IP65

Controlling Driver is Remote. Luminaire is DC SELV, **NOT 240VAC**.

CARE	Ensure luminaire is powered off. Remove dust with a soft dry cloth. Avoid solvents or abrasive materials when cleaning.

BRAE / Metal

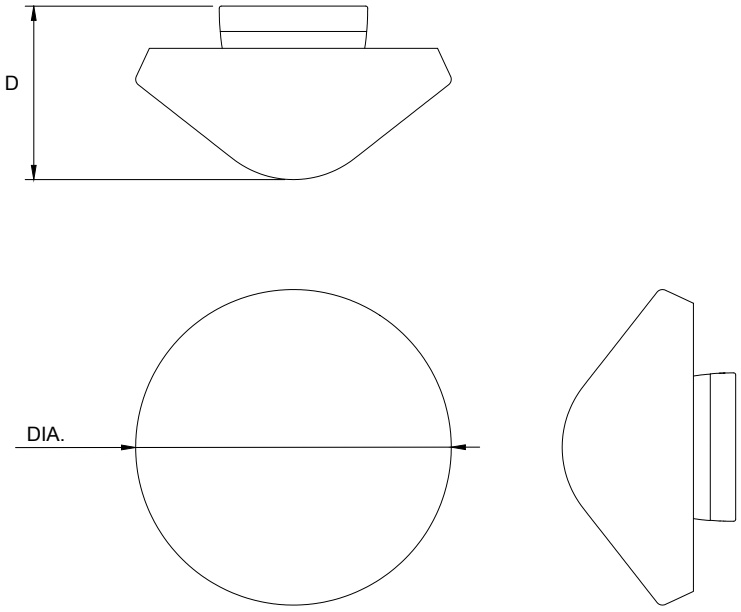

MEASUREMENT	VALUE
DIAMETER - DIA	155mm
DEPTH - D	85mm
WEIGHT	Brass - 1.95kg Aluminium - 0.75kg



BRAE / Timber

WALL

Brae is an indirect wall light that washes the wall with light in a full circle. Born from the study and exploration into the hands-on technique of sand cast metal and machined wood. The wall light features a clean silhouette juxtaposed by the raw materials and serendipitous textures that occur in the casting or natural timber.

MADE IN MELBOURNE, AUSTRALIA

MATERIAL FINISHES

SHADE	● American Walnut	● American White Oak
BODY	○ Flat White	

LIGHT SOURCE

COLOUR TEMPERATURE (CCT)	2700K - Warm White 3000K - Natural White 3500K - Mid White
CONTROL (REMOTE)	Non Dimmable Phase Dimmable (Standard) Dali Dimmable
LAMP	LED Module - Constant Current
POWER	3.60 Watts
OUTPUT	500 Lumens
LED LIFE	50,000 Hours
LED SET UP	Indirect
COLOUR RENDERING INDEX (CRI)	90+

PHYSICAL

DIMENSIONS	American Walnut - 155mm Dia. x 85mm D American White Oak - 155mm Dia. x 85mm D
WEIGHT	American Walnut - 0.50kg American White Oak - 0.50kg
MOUNTING	Bracket

COMMERCIAL

LEAD TIME	6 Weeks
WARRANTY	3 Year Manufacturers Warranty
INSTALLATION	Licensed Electrician

CERTIFICATION

AU/NZS	AU/NZS 60598.1, 60598.2.1
INGRESS PROTECTION (IPXX)	Light Unit rated to IP65. Timber Shade not suitable for wet or damp areas.

Controlling Driver is Remote. Luminaire is DC SELV, **NOT 240VAC**.

CARE	Ensure luminaire is powered off. Remove dust with a soft dry cloth. Avoid solvents or abrasive materials when cleaning.

BRAE / Timber

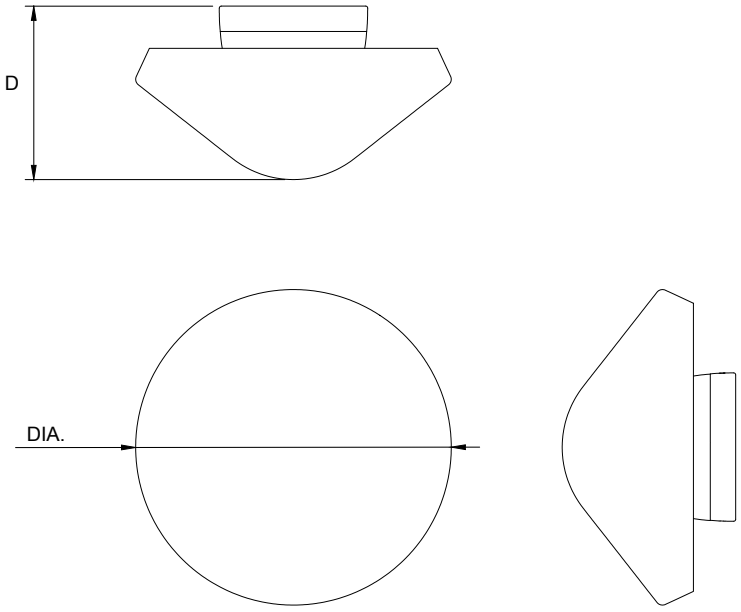

MEASUREMENT	VALUE
DIAMETER - DIA	155mm
DEPTH - D	85mm
WEIGHT	American Walnut - 0.50kg American White Oak - 0.50kg



BRAE / Maca

WALL

Brae is an indirect wall light that washes the wall with light in a full circle. The shade is cast in MACA by Avant Mater, from macadamia shells sourced in the Northern Rivers of New South Wales, crushed fine and bound with a binder made entirely from organic matter, with no plastic resins. The shade is lightweight, in a rich chocolate brown, with grains of shell visible across the surface. Each shade varies slightly from the next.

MADE IN MELBOURNE, AUSTRALIA

MATERIAL FINISHES

SHADE	Cast Macadamia
BODY	Bronze

LIGHT SOURCE

COLOUR TEMPERATURE (CCT)	2700K - Warm White 3000K - Natural White 3500K - Mid White
CONTROL (REMOTE)	Non Dimmable Phase Dimmable (Standard) Dali Dimmable
LAMP	LED Module - Constant Current
POWER	3.60 Watts
OUTPUT	500 Lumens
LED LIFE	50,000 Hours
LED SET UP	Indirect
COLOUR RENDERING INDEX (CRI)	90+

PHYSICAL

DIMENSIONS	155mm Dia. x 85mm D
WEIGHT	0.50kg
MOUNTING	Bracket

COMMERCIAL

LEAD TIME	8 Weeks
WARRANTY	3 Year Manufacturers Warranty
INSTALLATION	Licensed Electrician

CERTIFICATION

AU/NZS	AU/NZS 60598.1, 60598.2.1
INGRESS PROTECTION (IPXX)	Light Unit rated to IP65. Maca Shade not suitable for wet or damp areas.

Caution: Product Made With 100% Organic Macadamia Shells.

Controlling Driver is Remote. Luminaire is DC SELV, **NOT 240VAC**.

CARE	Ensure luminaire is powered off. Remove dust with a soft dry cloth. Avoid solvents or abrasive materials when cleaning.

BRAE / Maca

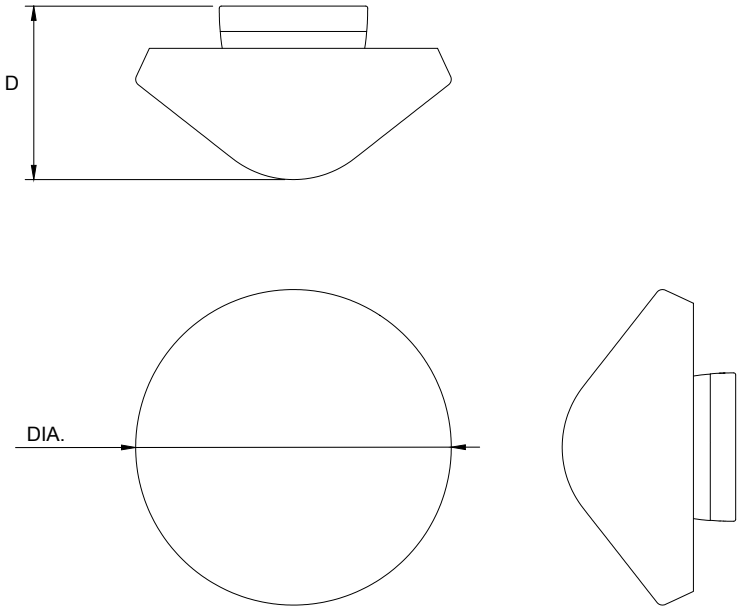

MEASUREMENT	VALUE
DIAMETER - DIA	155mm
DEPTH - D	85mm
WEIGHT	Maca - 0.50kg